# ROGUE

## ASSEMBLY MANUAL

VELDURO

# What’s in the Box?

**Your frame is protected by fully eco-friendly packaging.**

**Open the carton, and you'll find:**
The Rogue e-MTB frame assembled with display, battery and motor
Avinox 168W charger
Avinox SL cranks 155mm
Avinox customized 104BCD chainwheel spider
FSA NO.57 MTB headset, ZS44/56
Velduro steel chainwheel, 104BCD, 34T

**Options:**
FOX Float X2 F-S shock, Fox Factory custom tuned

# Product Parts Overview

**Before starting to buy your parts, please familiarize yourself with the names of your bicycle's components.**

*17. Saddle*
*18. Dropper*
*19. Seat clamp*
*20. Shock*
*21. Linkage*
*22. Valve*
*23. Idler and mount*
*24. Cassette*
*24. Derailleur*
*26. Chain*
*27. Spider*
*28. Chainwheel*

*1. Display control*
*2. Grips*
*3. Dropper remote*
*4. Brake levers*
*5. Handlebar*
*6. Stem*
*7. Head set*
*8. Shift lever*
*9. Fork*
*10. Tire*
*11. Rim*
*12. Spoke*
*13. Brake Caliper*
*14. Hub*
*15. Brake Disc*
*16. Crank*

# Rogue Parts

**Before purchasing Parts, please check the information about compatibility with your frame.**

**1.Stem&Headset**
Your frame set already includes an FSA alloy MTB headset. If you need to replace it,please note whether the headset are compatible with the frame,  spec: external wiring, ZS44mm/56mm MTB headset .

**2.Suspension:**
**Fork:** 1.5T, 160-180mm travel single crown fork suitable, 170mm as suggested.
**Shock:** Trunnion shock only, eye to eye 205mm, bottom bushing as M8*30mm, 65mm travel as suggest for 165(STD)/170(PRO)mm rear travel, 62.5mm travel for 160(STD)/165(PRO)mm rear travel. For the specific shock absorber compatibility list, please refer to the official website.
**Dropper:** Dia 31.6mm, insert depth S: 260mm, M:280mm,L:300mm ,XL: 325mm, cable length: 1200mm

**3.Shifter&Brakes:**
Shifters and brakes are key components for cycling. Since the Rogue is equipped with a powerful Avinox electric assist system, please choose high-quality components to ensure your riding safety.
**Brake specifications:** Frame rear brake post mount 200mm directly, cable length F900/R1700mm
**Shift specifications:** 1x shifting only, supports UDH, as well as both electronic and mechanical shifting. Manual shift cable length 1700mm

**4.Chainwheel&Crank:**
**Crank:** ISIS Standard crank, no longer than 165mm, 25 offset proved.
**Chainwheel:** 104BCD, up to 34T.
**Chain length:** depends on your shift system,124links if with 34T chainwheel and 10-52T 12s cassette.
**Chain length caculator:** Wrap the chain around the large chainring, idler pulley, and largest cassette cog. Compress the bike to fully compress the rear shock; deflate or remove the shock if needed. With the bike compressed, pull the chain's two ends together. Add 1 inner link and 1 outer link where it starts to overlap. Use an approved chain breaker tool to break the chain at the inner link.

**5.Wheels**
Wheel sets are key components for cycling. Since the Rogue is equipped with a powerful Avinox electric assist system, please choose high-quality components to ensure your riding safety.
**Hub:** Normally front 15x110mm(depends on your fork), rear 12x148mm, Six-bolt (Six-bolt is required for installing the speed sensor ring. If your hub has a center-lock structure, please use a center-lock to six-bolt adapter for the rear wheel), Please choose the correct type of freehub to ensure it is compatible with your shifting system. Need to be high strength eMTB proved hub, steel freehub as suggested.
**Spokes:** Need to be high strength eMTB proved spokes.
**Rim:** Front 29inch, rear 29 or 27.5 inch. The inner width should be no less than 30mm. Please note the compatibility between the inner width and the tire width.
**Tires:** Front 29x2.5 as suggested, rear 29x2.4/ 27.5x2.4 as suggested, no bigger than 2.6 width.

# Before Assembly

## SYMBOLS AND THEIR MEANINGS

When reading this manual, you will find various important symbols and warnings, explained as follows:

WARNING!
The symbol paired with the word WARNING signifies a potentially dangerous scenario. If not avoided, it could lead to serious injury or death. Many such warnings state, *"You may lose control and suffer a fall."* Since any fall can cause severe harm or even fatal consequences, we do not always repeat the warning of possible injury or death.

CAUTION
- When combined with the safety alert symbol, CAUTION denotes a potentially hazardous situation. If ignored, it may cause slight to moderate harm, or serves as a reminder against unsafe practices.
- When CAUTION appears without the safety alert symbol, it indicates a situation that, if unaddressed, could result in severe damage to the bicycle or the invalidation of your warranty.

Information Symbol
This symbol draws your attention to particularly crucial information.

Tech Tips Symbol
Tech tips offer handy advice and tricks for installation and use.

Grease Symbol
This symbol means premium grease should be applied as shown.
*Do not apply grease to the threads.

Carbon Assembly Paste Symbol
This symbol indicates premium carbon assembly paste should be applied as illustrated.

Threadgrip Symbol
This symbol signifies a high-quality threadgrip should be applied as depicted.

WARNING – HOT SURFACE!
The symbol combined with these words warns of a potentially dangerous situation involving a surface too hot to touch. If not avoided, it could cause burns of varying degrees.

Torque Wrench Symbol
This symbol indicates that a torque wrench is required at this step to tighten the screws to the correct torque.

# Install the Charge port and Cover(if not pre-installed)

Pinch the Y-shaped cable, and align the charging port section of the Y-shaped cable with the frame opening on the downtube. Align the positions of the four screw holes with the corresponding openings on the frame. Use an H1 screwdriver to cross-tighten the four screws, with a tightening torque of 0.5Nm.
Insert the protruding end of the plastic charging cover into the frame notch, and press firmly to make it fit tightly to maintain water resistance.

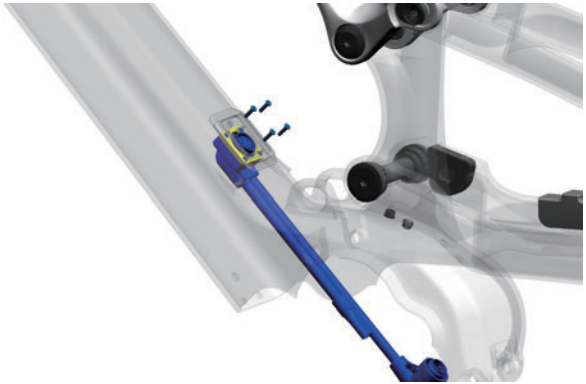

## Install the Shock(if not pre-installed)

First, prepare a set of M8*30 bushings and install them into the mounting holes beneath the shock. Align the shock with the mounting slot above the frame motor. Using a H5 wrench, align the flip chip with the rear cylinder mounting holes and tighten to 6Nm. The rear cylinder has two mounting positions: STD and PRO. Please note to select based on the flip chip:screw at the front is STD, screw at the rear is PRO.

Place the washers into the bearings on both sides of the linkage opening. Slide the shock into the opening. Using a H6 wrench, tighten the screws on both sides individually, then lock them to a torque of 10Nm.

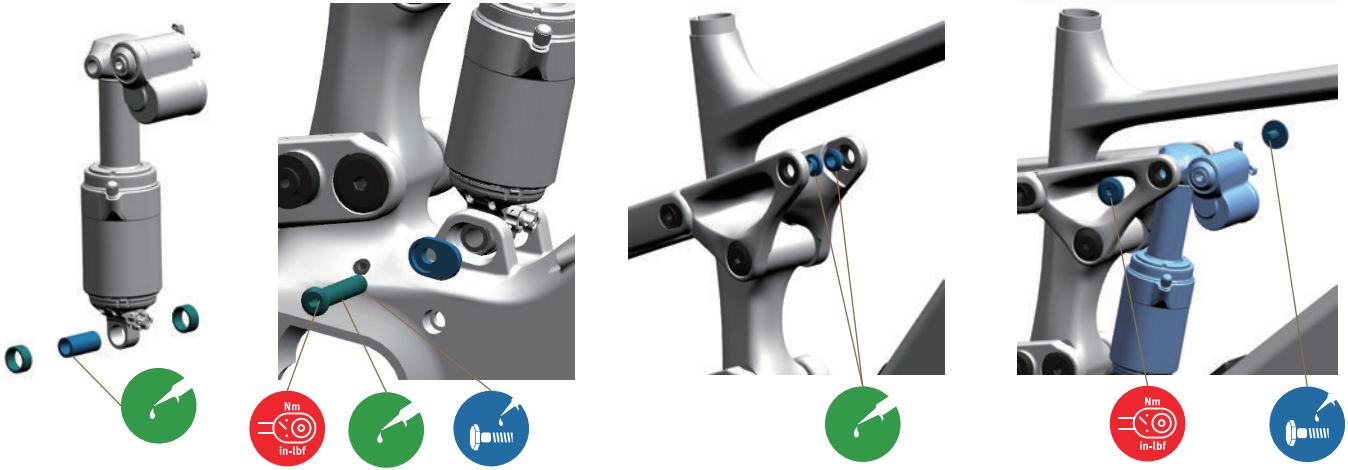

## Install the Rear Brake and other cables. ⚠

Insert the speed sensor connector from beneath the brake mount and feed it through until it emerges from the front of the rear fork. Secure the sensor to the frame using a 2mm hex socket screw.
Feed the rear brake hose through the routing port on the seat stay and insert it through the center of the chainstay until it emerges from the front end. Use a size 5mm hex wrench to secure the brake to the frame.
Route the brake hose emerging from the front of the chainstay and the speed sensor cable together through the cable opening beneath the pivot point, then feed them both into the cable hole next to the charging port.
Insert the dropper's outer tube through the right cable tunnel in down tube on the frame, then route it through the motor opening into the seat tube.

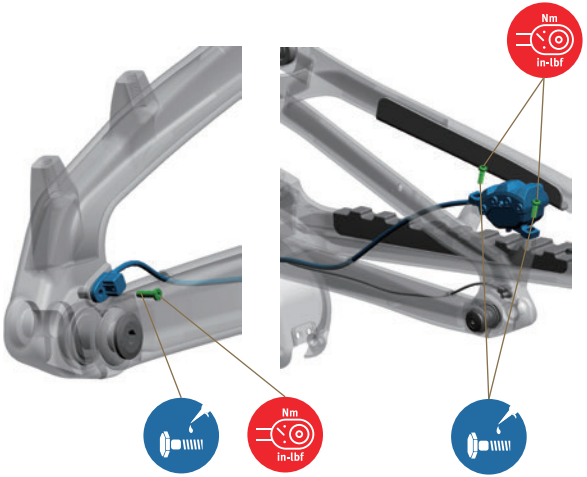


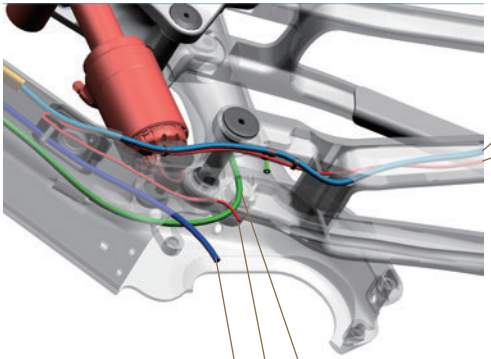

# Install the Rear derailleur and cable.

**Standard Rear Derailleur**
Straighten the frame's derailleur hanger; clean its holes. Align derailleur tab with hanger holes, hand-tighten bolts. Torque bolts to 5-8 N·m. Attach shift cable to derailleur clamp; adjust tension.
**Full Mount Rear Derailleur**
Check derailleur fits UDH standard. Align derailleur tab with UDH's central bolt hole. Torque UDH bolt to 6-7 N·m (use derailleur-included bolt).
Attach shift cable, pull to remove slack, lock clamp. (Optional) Confirm derailleur pulleys align with cassette (UDH marks help).
Insert the gear shifter housing (if equipped) from beneath the right chainstay of the frame, route it forward through the chainstay, pass it through the cable clip, then insert it into the down tube from the charging port side. Feed it through the down tube's cable port and route it out from the front of the frame.

**Sram Setting Configuration**
Gear 6 (24T)
Position A
30% Shock Sag
124 links

# Install the Battery

Slide the battery into the downtube through the motor opening. Note that the battery's discharge port should face downward.
To install the **800wh** battery, first, use the included short screws and a 3mm Hex wrench to pre-lock the battery from beneath the frame. Then, insert the longer screw through the battery opening at the display panel and secure the battery to the frame. Finally, tighten the both two screws.
To install the **600Wh** battery, first, use the included short screws and a 3mm Hex wrench to pre-lock the battery from beneath the frame. Next, use the 3mm Hex wrench to tighten the battery at the screw hole in the middle of the down tube. Finally, tighten the screw at the bottom,.
The screws have a locking torque of 5 Nm.Insert the green connector of the Y-cable into the battery's discharge port, push it in firmly until the locking mechanism locks into place.

**800Wh**

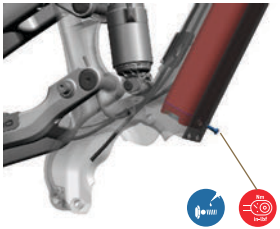

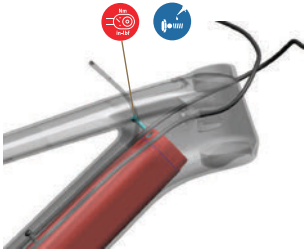

**600Wh**

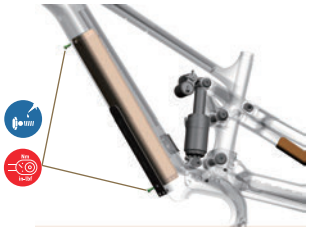

# Install the Display(if not pre-installed)

Feed the display's communication cable through the display panel opening on the frame's top tube until it protrudes from the opening near the motor. Take out the display and connect its communication cable to the display. Insert the rear end of the display into the frame first, then press the front end until it is fully embedded. Use a 2mm hex wrench to lock the display onto the frame, with a locking torque of 0.6 Nm.
***If you plan to install an 800Wh battery, please install the** display **after the battery installation.**

# Install the Chainwheel and Crank

**Secure Chainring to Spider:**
Take an H5 screwdriver and align the chainwheel with the spider, ensuring their holes match. Insert the four chainring bolts through the chainwheel and spider, then tighten each bolt with the H5 screwdriver. Use a torque wrench to lock them to 8 N·m (tighten evenly to avoid misalignment).
**Chainwheel Spider Installation (if not pre-installed):**
The chainwheel spider is usually pre-mounted on the motor. If not, use the Avinox special tool to lock the spider onto the motor via the spider lock. Tighten to a torque of 35 N·m to secure it firmly.
**Install Crank to Motor:**
Attach the crank to the motor's crank interface. Use an H8 wrench to tighten the crank's fixing bolt(s), then set the torque to 50 N·m with a torque wrench to ensure it's fully secured.

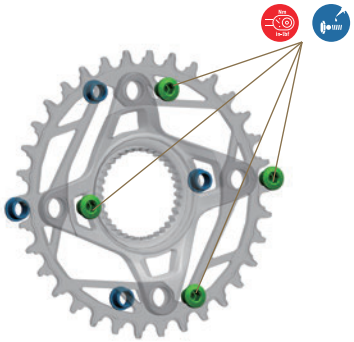

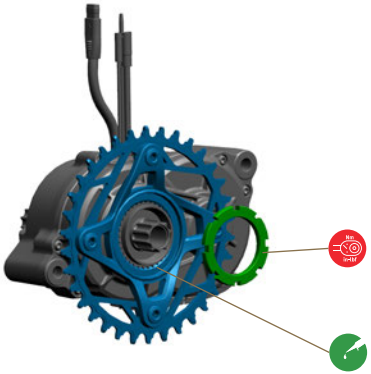

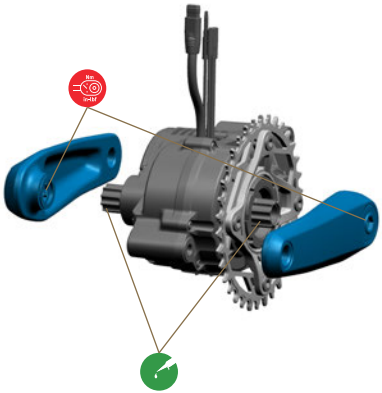

## Install the motor and cover

Connect the wire harnesses from the frame to those on the motor respectively, and place the reserved waterproof sleeve over the connection point. ensure they are tightly joined to guarantee waterproof performance. After neatly arranging the wire harnesses, install the motor into the frame. Use H6 and H8 screwdrivers to lock the motor to the frame with the motor screws. Note that the longer motor screws should be placed at the front, and the shorter ones at the rear. A set of motor mounting spacers contains two serrated spacers. To attach the spacers, first align the large serrations as depicted in the illustration, and then fit them onto the bolt. with a locking torque of 20-22Nm.Use an H4 screwdriver to tighten each of the three motor cover screws onto the frame, with a tightening torque of 2Nm.

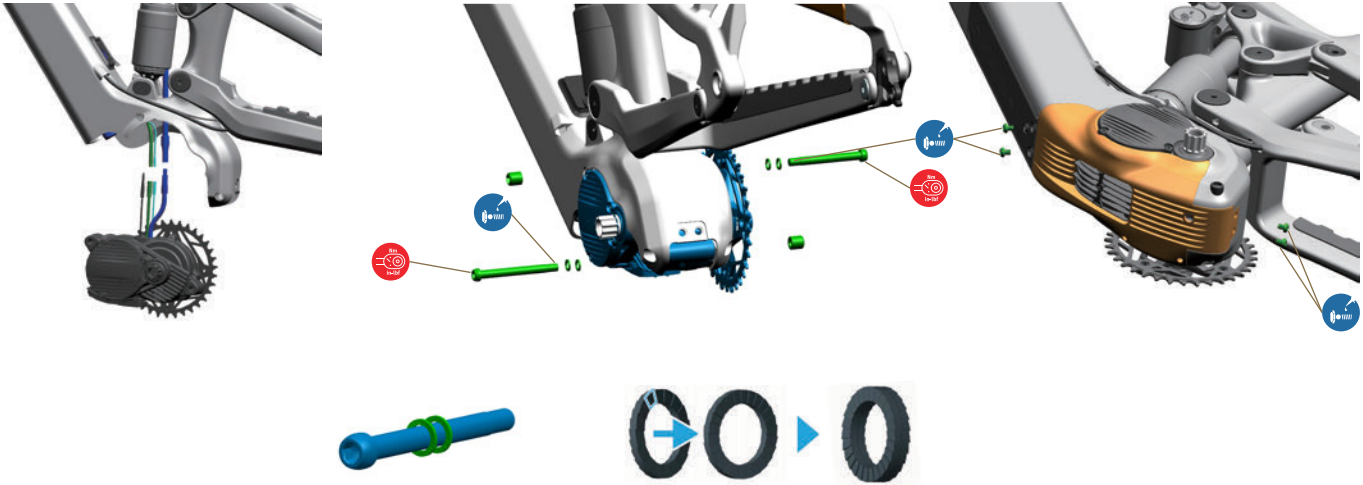

# Install the Front Brake and fork ⚠

Typically, the front brake must be mounted on the fork via an adapter. Use an H5 screwdriver to secure the adapter to the fork, then use the H5 screwdriver to secure the brake to the adapter. Tightening torque: 6Nm. Press the upper and lower headset cups into the head tube and insert the bearings. Insert the fork from the bottom of the head tube.
Note: Properly manage the length of the brake hose. The steeringtube may be excessively long. After confirming the required length, use a specialized saw blade to cut it to the appropriate size.

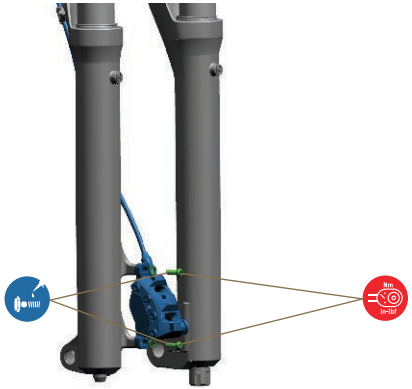

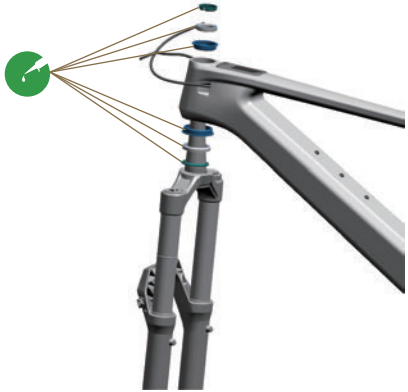

# Install the stem and handlebar

Install the cover above the headtube headset. Install spacers as needed to increase height.
Finally, mount the stem onto the front fork's steerer tube. Use an H4 hex key to tighten the steerer clamp bolts in place, with a tightening torque of 6Nm.
Install the Top Cap by tightening the Fixing Bolt with a 6mm hex wrench until proper bearing preload is achieved, with a tightening torque of 5Nm.
Align the handlebar with the center of the stem, adjust to the proper angle, and install the stem cap, and pre-tighten it using an H4 screwdriver. Tighten the four screws sequentially using a diagonal pattern to 6Nm, ensuring no gap remains at the top.

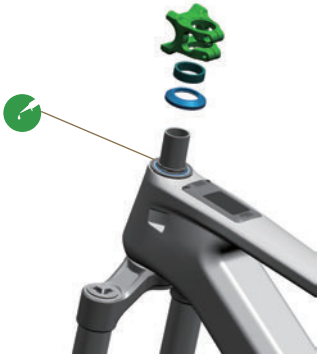

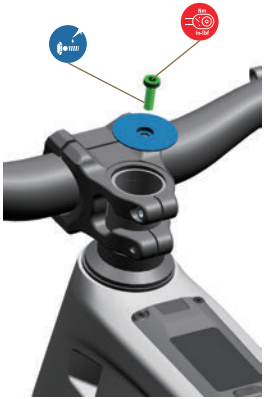

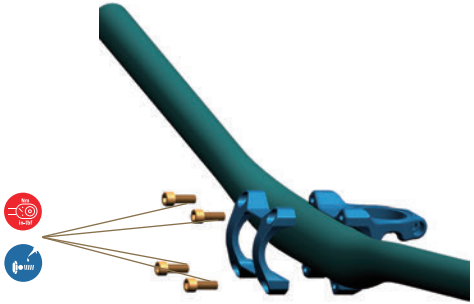

## Install the dropper and saddle

Insert the dropper cable housing into the outer routing tube at the seat tube until fully seated. Attach the mounting clip at the end of the housing to the bottom of the dropper. Insert the dropper seatpost into the seat tube while simultaneously pulling the gear housing outward at the opening near the head tube until the seatpost is fully seated. Secure the seat clamp using an H5 wrench with a tightening torque of 5Nm.
Install your seat onto the seatpost and tighten it using an H5 wrench, applying a torque of 10 N·m.

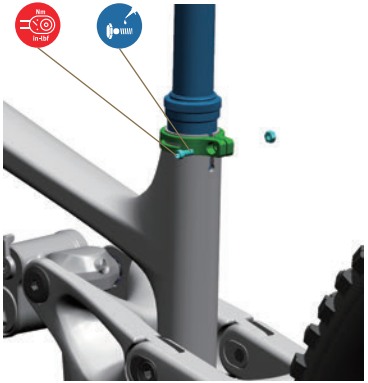

# Install the handlebar accessories

Depending on the accessories you choose, the installation method for handlebar accessories may vary. The following installation methods are for reference only:
Using an H4 wrench, install the dropper lever on the left side. Then, using the same wrench, install the brake levers on both sides of the handlebar. Use an H2.5 wrench to install the display remotes on both sides. On the right side, use an H5 wrench to install the shift lever. Slide grips onto both ends of the handlebar and adjust to the desired position before tightening. Position and secure all previously installed components according to your riding preferences. The display remote requires a tightening torque of 2Nm; refer to component markings for other parts. Connect the brake hoses and shift/dropper cables to their correct positions.

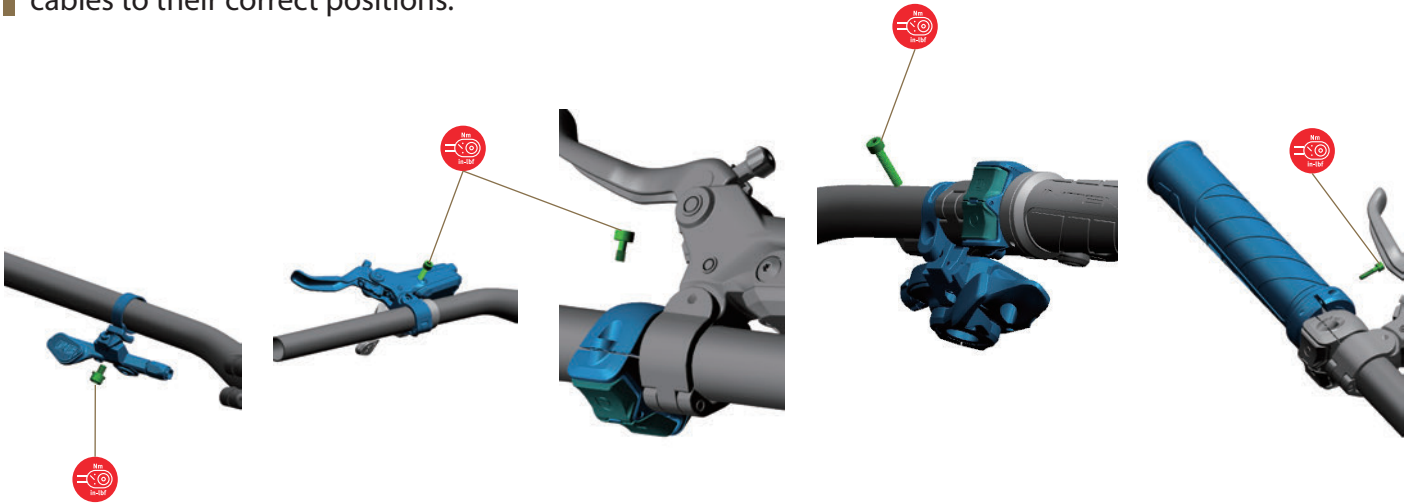

# Prepare the Wheels ⚠

**Front Wheel (6-Bolt Rotor Only)**:
For centerlock hubs: First attach the centerlock-to-6-bolt adapter to the hub. Tighten it to 12-15 N·m (follow hub manufacturer's specs if different).
Align the 6-bolt rotor's holes with the adapter/hub holes.
Screw in the 6 rotor bolts with T25 wrench, with a tightening torque of 4-6 N·m (do not over-tighten to avoid damaging the rotor).
**Rear Wheel (6-Bolt Rotor + Cassette):**
Rotor installation: Repeat the front wheel's rotor steps (use adapter for centerlock hubs, tighten adapter to 12-15 N·m, rotor bolts to 4-6 N·m), lock the speed sensor rotor with disc rotor.
Cassette installation: Align the cassette with the rear freehub's notches. Push firmly until it clicks into place. Use a cassette tool to tighten the cassette lockring to 35-45 N·m (check cassette brand specs for adjustments).

## Install the Wheels

Before installing the wheelset, confirm whether your rear wheel is 29-inch or 27.5-inch. Then use an H6 screwdriver to adjust the wheelset clip chip at the junction of the linkage and seatstay. The screw at the rear is for 27.5-inch wheels, while the one at the front is for 29-inch wheels.
For both wheels, start by using the correct hex wrench to remove the corresponding thru-axle—twist counterclockwise (if threaded) to take the front axle out of the fork and the rear axle out of the frame's dropouts. Next, align the front wheel's hub with the fork's dropout slots, slide it fully into place, then insert the front thru-axle through the fork and hub (twist clockwise to start if threaded). For the rear wheel, align its hub with the frame dropouts (making sure the cassette lines up with the chain), push it all the way in, and insert the rear thru-axle through the frame and hub (thread clockwise to start if needed). Tighten both axles with the 8mm hex wrench—use the torque wrench to set the front to 12-15 N·m and the rear to 12-18 N·m (check frame specs)

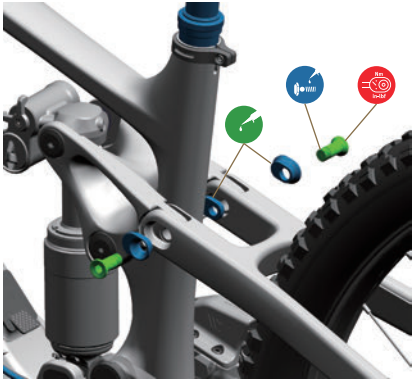

# Install the Idler and chain

Install the idler and bush onto the idler mount from the side of the right chain stay.
Wrap the chain around the front chainring and rear cassette, first ensuring the chain direction is correct: align any arrows marked on the chain with the bike's forward movement direction. For SRAM Flaptop chains, make sure the Flaptop (flat, wide side of the link) faces outward . Ensure the chain sits smoothly on the teeth with no twists. Bring the two ends of the chain together—for quick-release links, push the pins into the link until it clicks; for rivet-style chains, use a chain tool to press the rivet through both ends (stop before it fully exits the outer plate).
Install the idler cover from the top of the idler downward. Use an H4 screwdriver to pre-tighten the two upper screws. Use a H4 wrench to tighten the side screws to 5N·m, then tighten the upper screws to 5N·m.
Pull the chain gently to check if it's secure (no slack or looseness). Shift through all gears to confirm the chain moves freely between the chainring and cassette, then spin the cranks to ensure no skipping or rubbing.

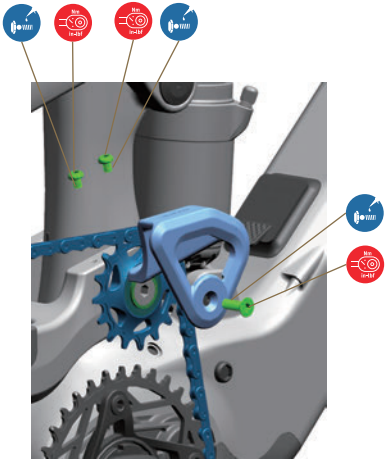

# Before Your First Ride:

Before starting your first ride**, make sure that all assembly and adjustment has been properly completed.** Assemble the bike in strict accordance with the instructions. Complete the initial setup of the bike. Properly adjust the tires and suspension. It is recommended that the seat be adjusted to the proper height according to the riding position shown in the illustration, The handlebar must be kept 90 degrees (perpendicular to the front wheel) and locked. E-bikes are significantly different from ordinary bicycles. Before riding, be sure to fully understand the functions of each component such as the brakes, transmission, seat and drive system. Read the safety guidelines carefully before use. Strictly observe the intended use of the e-bike, load limitations and all relevant laws and regulations.

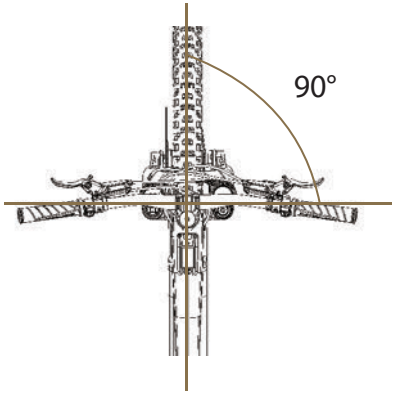


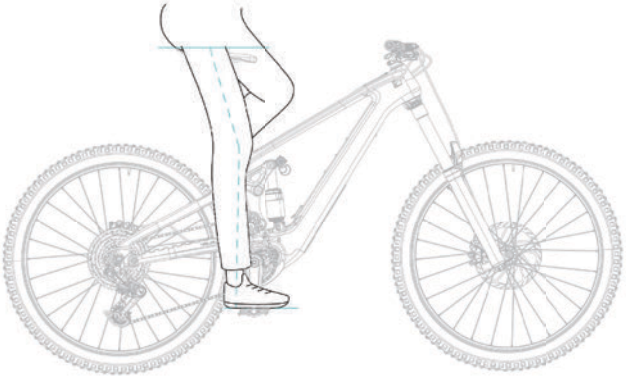

**DEFY THE LIMIT.**

VELDURO